PRN											

JSPM's

Rajarshi Shahu College of Engineering, Tathawade, Pune- 411033

(An autonomous Institute affiliated to Savitribai Phule Pune University)

END SEMESTER EXAMINATION (ESE), MAY - 2024

ESE/3024 (M) 23-24

Programme: FY. B. Tech

Class: F.Y B. Tech **SEM - II**

Course: Engineering Drawing [ME1202]

Time: 2 Hours Max. Marks: 35

Instructions to the Candidates
• Solve one sub questions (A or B) from Q1, Q2, Q3, Q4, Q5 and Q6.

Q. No.	Description	Marks	CO	BL
Solve any one				
Q. 1 A)	A point is moving around the surface of a cylinder of 63 mm diameter at uniform speed and at the same time advances in the direction of axis by 110 mm also with uniform speed. Draw the path of the moving point and name the curve.	03	CO1	BL2
Q. 1 B)	An inelastic string wounded on the circumference of a circular disc of 42 mm diameter. Draw the curve traced out by the other end of the string when it is unwound.	03	CO1	BL2
Solve any one				
Q. 2 A)	For the object shown in figure, draw A) 1) Front View from direction 'X', 2) Top View and 3) show the overall dimensions.	04	CO2	BL3

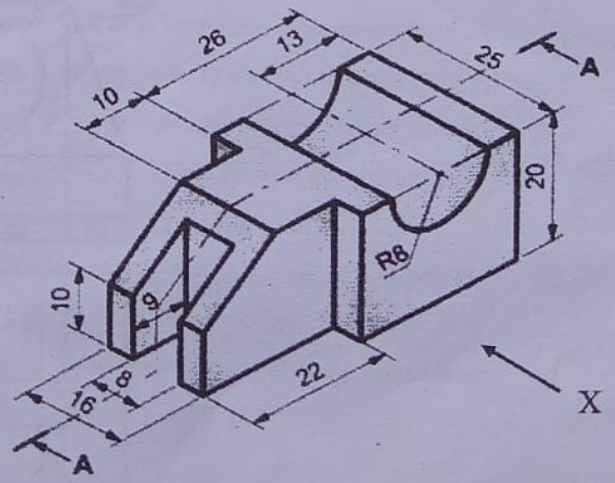

Q. 2 B) For the object shown in figure, draw 1) Front View from direction 'X', 2) Top View and 3) show the overall dimensions. 04 CO2 BL3

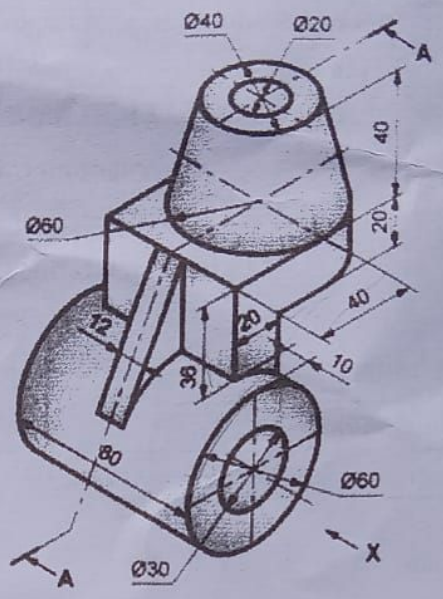

Solve any one

Q. 3 A) A square prism of base side 40 mm and length of axis 70 mm has one of its sides of base on the HP and perpendicular to VP. The face containing that side makes an angle of 30° to the HP. Draw the projections of the prism. 04 CO3 BL3

Q. 3 B) A square pyramid having axis height 65 mm, side of base 45 mm, is resting on side of base on HP and perpendicular to VP. Draw the projections of the solid, when its triangular face inclined at 40° to the HP. 04 CO3 BL3

Solve any one

Q. 4 A) Figure shows FV and TV of an object, Draw isometric View. 08 CO4 BL3

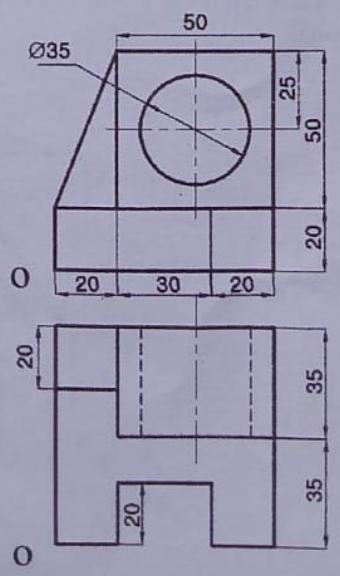

Q. 4 B) Figure shows FV, TV of an object, Draw isometric View. 08 CO4 BL3

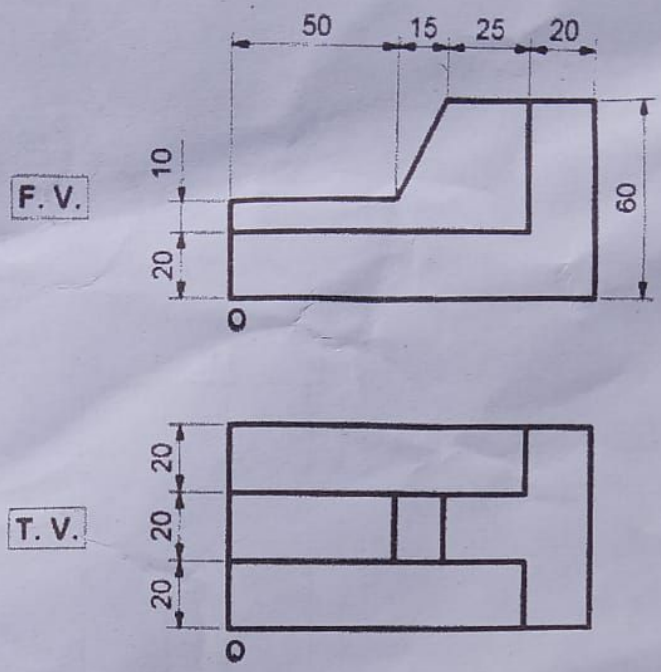

Solve any one

Q. 5 A) A cylinder of base diameter 63 mm and height 100 mm is resting on it base on the HP. It is cut by a plane perpendicular to the VP and inclined at 45° to the HP. The plane bisects the axis. Draw the development of the lateral surfaces of the lower portion of the cylinder. 08 CO5 BL2

Q. 5 B) A pentagonal prism of base side 35 mm and height 100 mm is resting on one of its base edge on the HP and perpendicular to VP. It is cut by a plane perpendicular to the VP and inclined at 40° to the HP. The plane bisects the axis. Draw the development of the lateral surfaces of the lower portion of the prism. 08 CO5 BL2

Solve any one

Q. 6 A) A Square Prism of base side 40 mm and axis length 80 mm, is resting on its rectangular face on the ground. A square base is parallel to and 20 mm behind the PPP. The observer looks at the prism from a point 90 mm above ground and 50 mm infront of the PPP. The CP is 120 mm away from the axis of the prism. Draw the perspective projection of the prism. 08 CO6 BL3

Q. 6 B) Figure shows the two views of a square prism resting on the ground on its base with a vertical face inclined at 30° to the PPP. An edge of that face is in the PPP and is 30 mm to the right of S. Draw the perspective projection of the prism if S is 120 mm above the ground and 60 mm in front of the PPP. 08 CO6 BL3

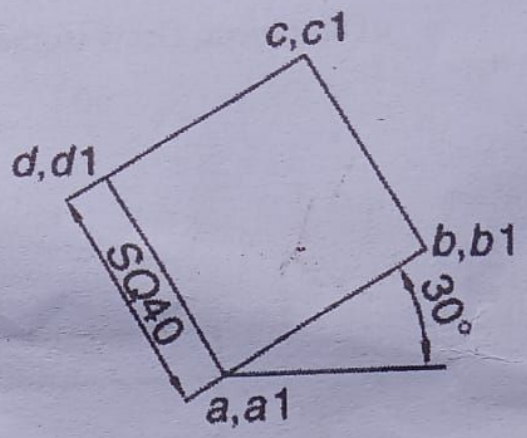
c,c1
d,d1
b,b1
SQ40
30°
a,a1

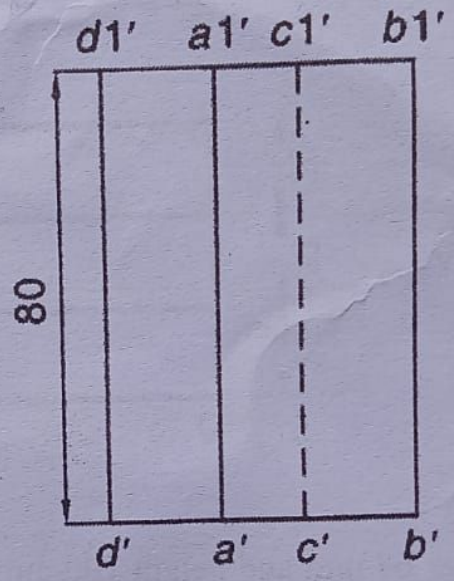
d1'
a1'
c1'
b1'
80
d'
a'
c'
b'